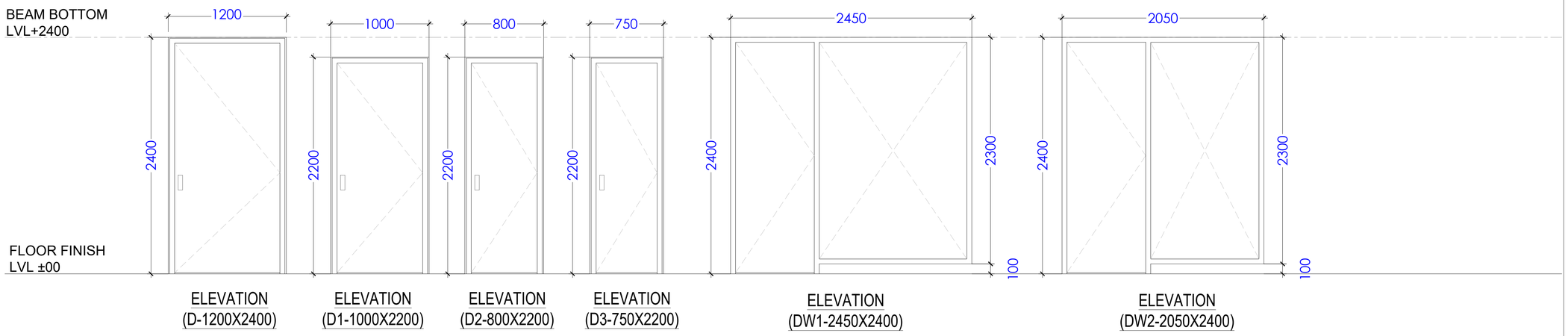

ELEVATION (D-1200X2400) | ELEVATION (D1-1000X2200) | ELEVATION (D2-800X2200) | ELEVATION (D3-750X2200) | ELEVATION (DW1-2450X2400) | ELEVATION (DW2-2050X2400)

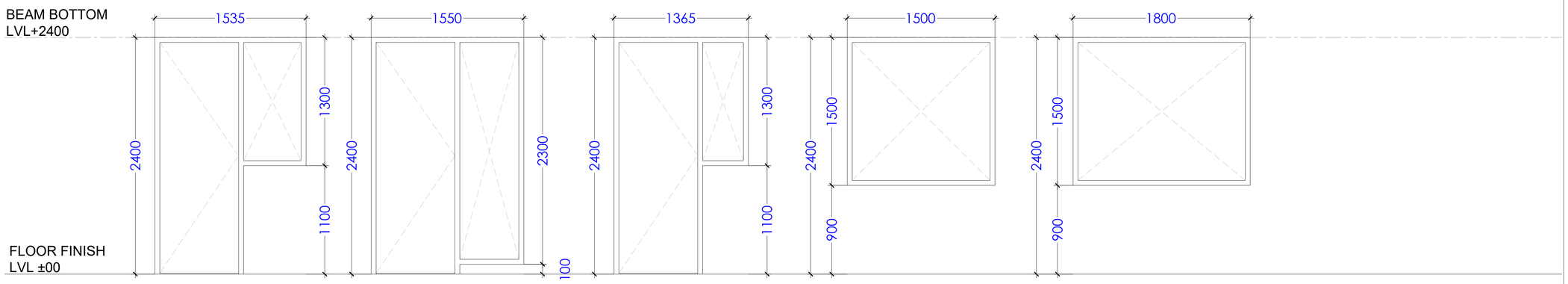

ELEVATION (DW3-1535X2400) | ELEVATION (DW4-1550X2400) | ELEVATION (DW5-1365X2400) | ELEVATION (W1-1500X1500) | ELEVATION (W2-1800X1500)

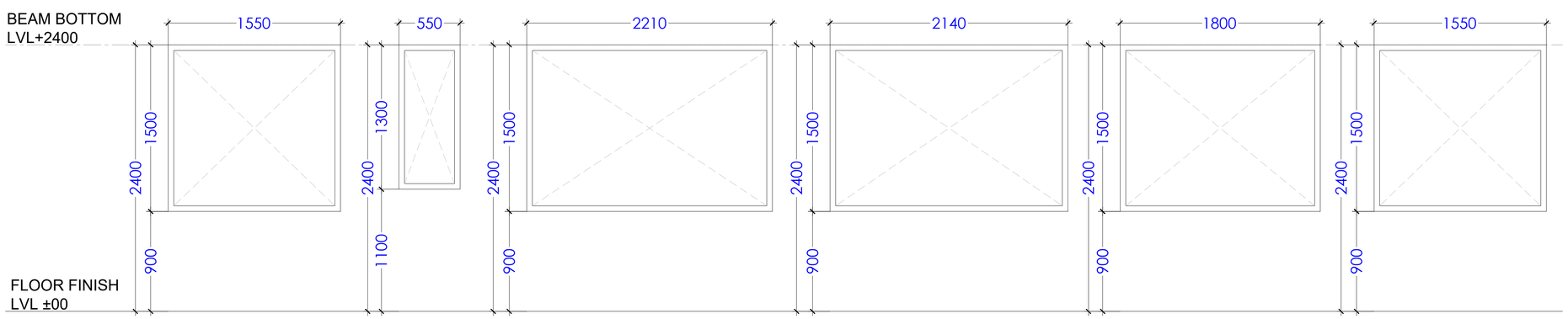

ELEVATION (W3-1550X1500) | ELEVATION (V1-550X1300) | ELEVATION (GL-2210X1500) | ELEVATION (GL1-2140X1500) | ELEVATION (GL2-1800X1500) | ELEVATION (GL3-1550X1500)

NOTES:
1. THIS DRAWING IS NOT TO BE SCALED. ONLY WRITTEN DIMENSIONS ARE TO BE FOLLOWED.
2. ALL DIMENSION SHALL BE CHECKED AT SITE BEFORE COMMENCEMENT OF WORK.
3. ANY DISCREPANCY MUST BE BROUGHT IN THE NOTICE OF ARCHITECT IMMEDIATELY.
4. THIS DWG. SHALL BE READ IN CONJUNCTION WITH STRUCTURE AND OTHER SERVICES DWG.

S.NO.	DATE	REMARK

REVISIONS-:

SCHEDULE OF OPENING

S. NO.	LEGEND	WIDTH MM	HEIGHT MM	CILL MM	LINTEL MM	REMARK
01	D	1200	2400	-	2400	MAIN DOOR
02	D1	1000	2200	-	2200	BEDROOMS
03	D2	800	2200	-	2200	STORE
04	D3	750	2200	-	2200	TOILETS
05	FD	1200	2200	-	2200	FIRE DOOR
08	DW1	2450	2400	00/100	2400	EXTERNAL DOOR
09	DW2	2065	2400	00/100	2400	EXTERNAL DOOR
10	DW3	1550	2400	00/100	2400	EXTERNAL DOOR
11	DW4	1365	2400	00/1050	2400	KITCHEN
12	DW5	1550	2400	00/1050	2400	KITCHEN
13	W1	1500	1500	900	2400	BEDROOM
14	W2	1800	1550	900	2400	STILT FLOOR
15	W3	1550	1550	900	2400	STILT FLOOR
16	V1	550	1300	1100	2400	TOILETS
17	GL	2140	1500	900	2400	LIFT LOBBY
18	GL1	2085	1500	900	2400	LIFT LOBBY
19	GL2	1800	1500	900	2400	STAIRCASE
20	GL3	1550	1500	900	2400	STAIRCASE

OMAXE ARCH. PLANNING DEPT.
ADVANCE COPY | TENDER COPY | GOOD FOR CONSTRUCTION
DATE | SIGN Manish Kumar

DATE- October 9, 2024

OMAXE
TURNING DREAMS INTO REALITY

PROJECT TITLE-:

TOWER E, AANANDA
PRAYAGRAJ

DRAWING TITLE-:

DOOR & WINDOW OPENING

SCALE-NTS

DRAWING NO.

AANANDA/TOWER E/401